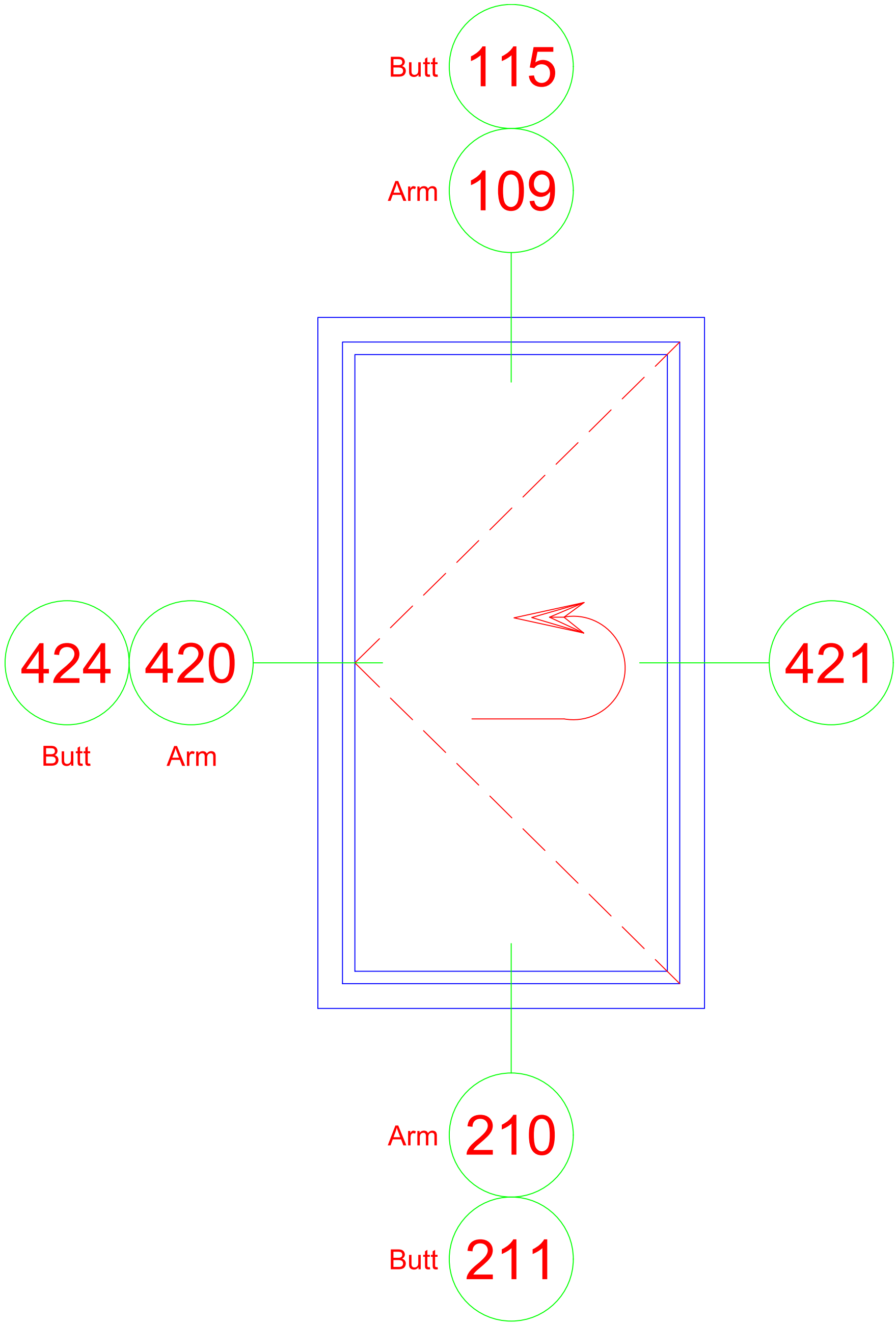

2700
Inside Glazed
Casement In
Left Swing
4-bar Arms / Butt Hinges
Cam Locks